Printed-circuit board connector - MSTBA 2,5/10-G-5,08-RN EX - 1796513

Please be informed that the data shown in this PDF Document is generated from our Online Catalog. Please find the complete data in the user's documentation. Our General Terms of Use for Downloads are valid
(http://phoenixcontact.com/download)

PCB headers, nominal cross section: 2.5 mm², color: green, nominal current: 12 A, contact surface: Tin, type of contact: Male connector, Number of potentials: 10, Number of rows: 1, Number of positions per row: 10, number of connections: 10, product range: MSTBA 2,5/..-G-RN-EX, pitch: 5.08 mm, mounting: Wave soldering, conductor/PCB connection direction: 0 °, pin layout: Linear pinning, solder pin [P]: 3.5 mm, Stecksystem: CLASSIC COMBICON (EX), Locking: Snap-in locking, type of packaging: packed in cardboard

Your advantages

- Maximum flexibility when it comes to device design – one header for connectors with different connection technologies
- Intuitive locking mechanism prevents accidental disconnection
- Well-known mounting principle allows worldwide use
- Satisfies the more stringent safety requirements of “Ex eb” protection according to IEC 60079-7 for potentially explosive areas
- Closed contour for optimum stability of the plug-in connection

Key Commercial Data

Packing unit	50 pc
GTIN	4 046356 636636
GTIN	4046356636636

Technical data

Item properties

Brief article description	Feed-through header
Plug-in system	CLASSIC COMBICON (EX)
Type of contact	Male connector
Range of articles	MSTBA 2,5/..-G-RN-EX
Pitch	5.08 mm
Number of positions	10
Mounting type	Wave soldering
Pin layout	Linear pinning
Locking	Engagement nose
Number of levels	1
Number of connections	10

Printed-circuit board connector - MSTBA 2,5/10-G-5,08-RN EX - 1796513

Technical data

Item properties

Number of potentials	10

Electrical parameters

Nominal current	12 A
Nom. voltage	176 V
Rated current	12 A

Material data - contact

Note	WEEE/RoHS-compliant, free of whiskers according to IEC 60068-2-82/ JEDEC JESD 201
Contact material	Cu alloy
Surface characteristics	Tin-plated
Metal surface contact area (top layer)	Tin (3 - 5 µm Sn)
Metal surface contact area (middle layer)	Nickel (1.3 - 3 µm Ni),
Metal surface soldering area (top layer)	Tin (3 - 5 µm Sn)
Metal surface soldering area (middle layer)	Nickel (1.3 - 3 µm Ni)

Material data - housing

Housing color	green (6021)
Insulating material	PA
Insulating material group	I
CTI according to IEC 60112	600
Flammability rating according to UL 94	V0
Glow wire flammability index GWFI according to EN 60695-2-12	850
Glow wire ignition temperature GWIT according to EN 60695-2-13	775
Temperature for the ball pressure test according to EN 60695-10-2	125 °C

Dimensions for the product

Caption	Schematische Abbildung - weitere Details siehe Produktfamilienzeichnung im Download Center
Length [l]	12 mm
Width [w]	56.62 mm
Height [h]	12.1 mm
Pitch	5.08 mm
Height (without solder pin)	8.6 mm
Solder pin [P]	3.5 mm
Pin dimensions	1 x 1 mm

Dimensions for PCB design

Hole diameter	1.4 mm

Packaging information

Type of packaging	packed in cardboard
Pieces per package	50
Denomination packing units	Pcs.

Printed-circuit board connector - MSTBA 2,5/10-G-5,08-RN EX - 1796513

Technical data

General product information

Type of note	Notes on operation
Note	In accordance with IEC 61984, COMBICON connectors have no switching power (COC). During designated use, they must not be plugged in or disconnected when carrying voltage or under load.

Standards and Regulations

Connection in acc. with standard	EN-VDE
Flammability rating according to UL 94	V0

Environmental Product Compliance

China RoHS	Environmentally friendly use period: unlimited = EFUP-e
	No hazardous substances above threshold values

Drawings

Drilling diagram

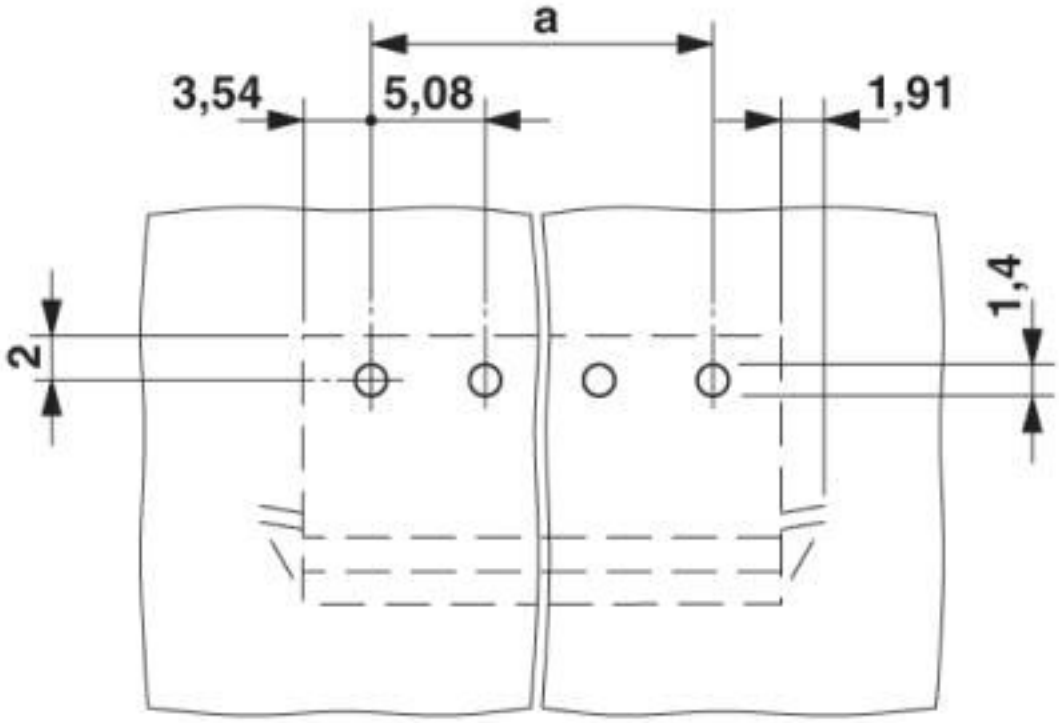

Printed-circuit board connector - MSTBA 2,5/10-G-5,08-RN EX - 1796513

Dimensional drawing

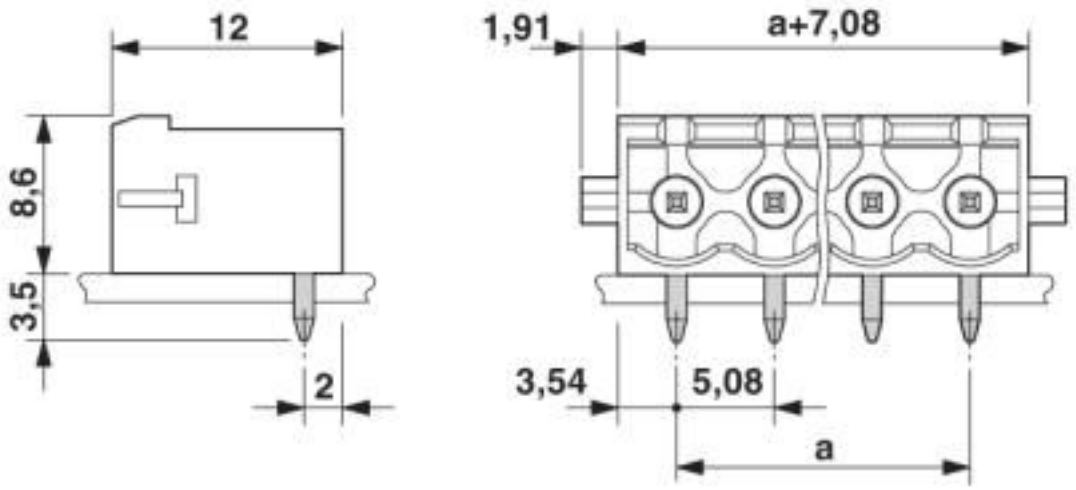

Classifications

eCl@ss

eCl@ss 10.0.1	27440402
eCl@ss 11.0	27460201
eCl@ss 4.0	27260700
eCl@ss 4.1	27260700
eCl@ss 5.0	27260700
eCl@ss 5.1	27260700
eCl@ss 6.0	27260700
eCl@ss 7.0	27440402
eCl@ss 8.0	27440402
eCl@ss 9.0	27440402

ETIM

ETIM 4.0	EC002637
ETIM 5.0	EC002637
ETIM 6.0	EC002637
ETIM 7.0	EC002637

UNSPSC

UNSPSC 6.01	30211810
UNSPSC 7.0901	39121409
UNSPSC 11	39121409
UNSPSC 12.01	39121409
UNSPSC 13.2	39121409
UNSPSC 18.0	39121409
UNSPSC 19.0	39121409
UNSPSC 20.0	39121409

Printed-circuit board connector - MSTBA 2,5/10-G-5,08-RN EX - 1796513

Classifications

UNSPSC

UNSPSC 21.0	39121409

Approvals

Approvals

Approvals

cULus Recognized

Ex Approvals

IECEx / ATEX / EAC Ex

Approval details

cULus Recognized		http://database.ul.com/cgi-bin/XYV/template/LISEXT/1FRAME/index.htm	E60425-19931011

	B	D
Nominal voltage UN	300 V	300 V
Nominal current IN	15 A	10 A

Accessories

Accessories

Coding element

Coding section - CR-MSTB - 1734401

Coding section, inserted into the recess in the header or the inverted plug, red insulating material

Filler plug

Accessories - MSTB-BL - 1755477

Keying cap, for forming sections, plugs onto header pin, green insulating material

Printed-circuit board connector - MSTBA 2,5/10-G-5,08-RN EX - 1796513

Accessories

Labeled terminal marker

Marker card - SK 5,08/3,8:FORTL.ZAHLEN - 0804293

Marker card, Card, white, labeled, horizontal: consecutive numbers 1 ... 10, 11 ... 20, etc. up to 91 ... (99)100, mounting type: adhesive, for terminal block width: 5.08 mm, lettering field size: 5.08 x 3.8 mm

Marker pen

Marker pen - B-STIFT - 1051993

Marker pen, for manual labeling of unprinted Zack strips, smear-proof and waterproof, line thickness 0.5 mm

Terminal marking

Marker card - SK 5,08/3,8:UNBEDRUCKT - 0805412

Marker card, Card, white, unlabeled, can be labeled with: Marker pen, mounting type: adhesive, for terminal block width: 5.08 mm, lettering field size: 5.08 x 3.8 mm

Phoenix Contact 2020 © - all rights reserved
http://www.phoenixcontact.com

PHOENIX CONTACT GmbH & Co. KG
Flachsmarktstr. 8
32825 Blomberg
Germany
Tel. +49 5235 300
Fax +49 5235 3 41200
http://www.phoenixcontact.com